Database Management System

Lecture 2: Introduction to Relational Model

Contents

- Structure of Relational Databases
- Database Schema and Instance
- Keys
- Schema Diagrams
- Relational Query Languages
- The Relational Algebra

Relational Model

- The ***relational model*** is a method for organizing data into tables (relations) with rows (tuples) and columns (attributes), acting as the foundation for ***Relational Database Management Systems (RDBMS)***.
- It structures data logically, independent of physical storage, allowing for efficient data manipulation, integrity, and querying via SQL.

Key Concepts of RM

- **Relations (Tables):** Data is structured into two-dimensional tables consisting of rows and columns.
- **Tuples (Rows/Records)**: Each row represents a unique instance of data, such as a specific employee or product.
- **Attributes (Columns/Fields)**: Each column represents a specific property or characteristic of the entity (e.g., name, age)
- **Primary Key:** A specific column or set of columns that uniquely identifies each row in a table.
- **Foreign Key:** A column that establishes a relationship by linking to the primary key of another table

Structure of Relational Databases

- A relational database consists of a collection of **tables**
- Each table has an unique name with multiple attributes/columns
- Examples:
  - Course(<u>course_id</u>, course_name, credits, *department_id*)
  - Department<u>(dept_id</u>, dept_name, hod, location, phone)
-

dept_id	dept_name	hod	location	phone
1	Computer Science	Dr. Rahman	Building A	01710000001
2	Electrical Engineering	Dr. Karim	Building B	01710000002
3	Business Administration	Dr. Sultana	Building C	01710000003
4	Mathematics	Dr. Hasan	Building D	01710000004

course_id	course_name	credits	department_id
101	Database Systems	3	1
102	Data Structures	3	1
201	Circuit Analysis	3	2
202	Digital Electronics	4	2
301	Marketing Principles	3	3
302	Financial Accounting	3	3
401	Linear Algebra	3	4
402	Calculus II	4	4

Table: students

id	name	roll	phone	session	dept_id
1	Arif Hossain	CSE-2101	01711000001	2021–22	1
2	Nusrat Jahan	CSE-2102	01711000002	2021–22	1
3	Tanvir Ahmed	EEE-2101	01711000003	2021–22	2
4	Sadia Islam	EEE-2102	01711000004	2021–22	2
5	Rakib Hasan	BBA-2101	01711000005	2021–22	3
6	Mehedi Rahman	BBA-2102	01711000006	2021–22	3
7	Fahim Chowdhury	MATH-2101	01711000007	2021–22	4
8	Jannat Akter	MATH-2102	01711000008	2021–22	4

Keys

- **Super keys**:
  - A set of attributes (one or more) that collectively identifies an entity in an entity set.
  - Example: teacher(id, name, phone, address)
  - SK: {id}, {phone}, {id, name}, {phone, name}
- **Candidate Keys**
  - A minimal super key is called a candidate key.
  - An entity set may have more than one candidate key.
  - Example: {id}, {phone}
- **Primary Keys**
  - One of the candidate keys that is selected by designer.
- **Foreign Keys**

Keys

- **Foreign Keys**
  - **Foreign keys** are the columns of a table that points to the primary key of another table
  - cross-reference between tables
  - Build a relationship among tables
  - Example:
    - Teacher(<u>id</u>, name, phone, address, *department_id*)
    - Department(<u>id</u>, name, hod, location)

- SK→CK→PK→FK

Teacher

id	name	phone	designation	department_id
101	Ayesha Islam	01712000001	Lecturer	1
102	Tanvir Ahmed	01712000002	Assistant Profe	1
103	Sadia Sultana	01712000003	Lecturer	2
104	Mehedi Hasan	01712000004	Associate Prof	3
105	Nusrat Jahan	01712000005	Lecturer	2

Foreign Key: Teacher.department_id → Department.id

Department

id	name	hod	location
1	Compute	Dr. Rahm	Building A
2	Electrica	Dr. Karim	Building B
3	Business	Dr. Sulta	Building C

Note: Outlined cells highlight the key columns (FK in Teacher, PK in Department).

Entity Relationship Diagram (ERD): University Database

- 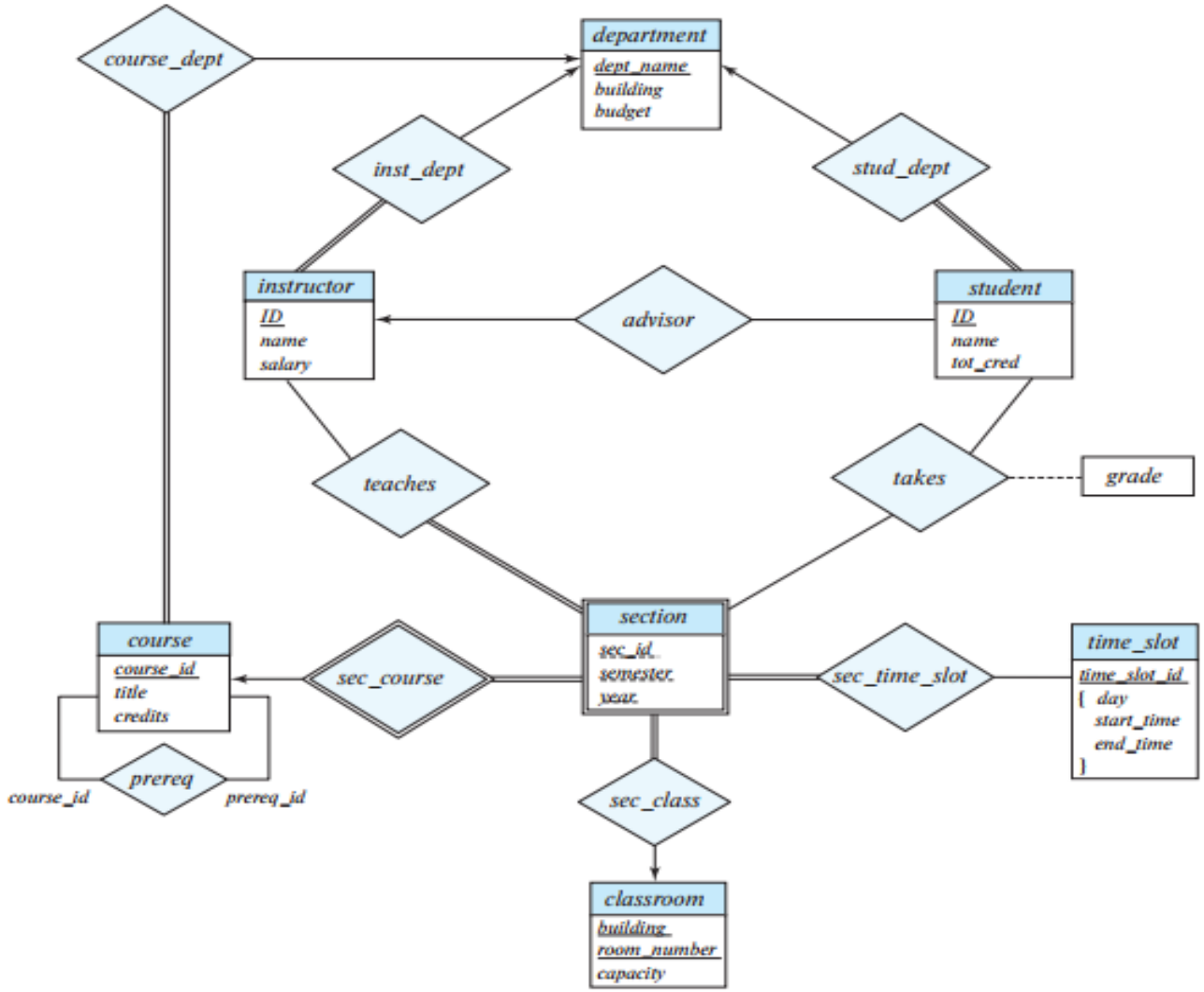

Schema Diagram

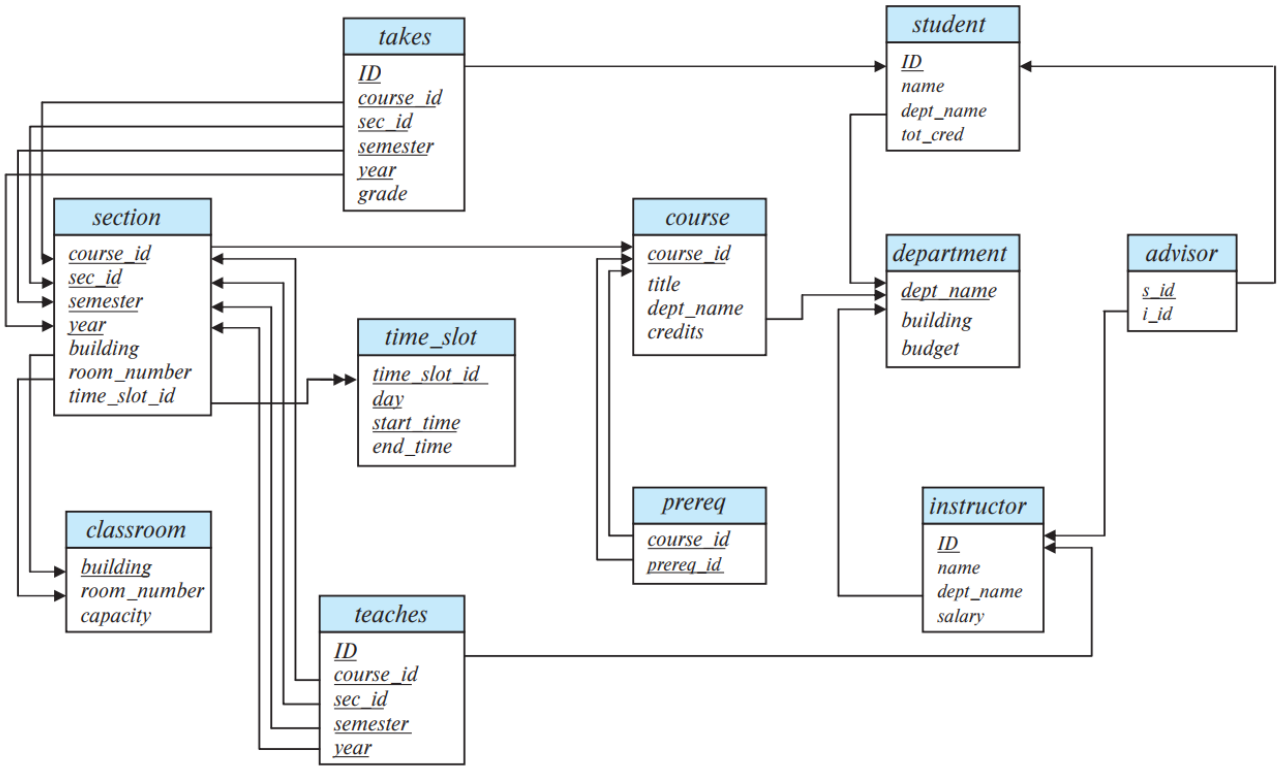

Figure 2.9 Schema diagram for the university database.

Schemas for University Database

classroom(*building*, *room_number*, *capacity*)
department(*dept_name*, *building*, *budget*)
course(*course_id*, *title*, *dept_name*, *credits*)
instructor(*ID*, *name*, *dept_name*, *salary*)
section(*course_id*, *sec_id*, *semester*, *year*, *building*, *room_number*, *time_slot_id*)
teaches(*ID*, *course_id*, *sec_id*, *semester*, *year*)
student(*ID*, *name*, *dept_name*, *tot_cred*)
takes(*ID*, *course_id*, *sec_id*, *semester*, *year*, *grade*)
advisor(*s_ID*, *i_ID*)
time_slot(*time_slot_id*, *day*, *start_time*, *end_time*)
prereq(*course_id*, *prereq_id*)

Database Schema and Instance

- Database schema -- is the logical structure of the database.
- Database instance -- is a snapshot of the data in the database at a given instant in time.
- Example:
  - schema: *instructor* (*ID, name, dept_name, salary*)
  - Instance:

ID	*name*	*dept_name*	*salary*
22222	Einstein	Physics	95000
12121	Wu	Finance	90000
32343	El Said	History	60000
45565	Katz	Comp. Sci.	75000
98345	Kim	Elec. Eng.	80000
76766	Crick	Biology	72000
10101	Srinivasan	Comp. Sci.	65000
58583	Califieri	History	62000
83821	Brandt	Comp. Sci.	92000
15151	Mozart	Music	40000
33456	Gold	Physics	87000
76543	Singh	Finance	80000

Chapter 2

END OF LECTURE